Iowa Flood Mitigation Program (FMP)
Flood Recovery Project Application

I. Applicant Information

A. Applicant/Community Name	B. Address		City, State, Zip Code
Glenwood Municipal Utilities	7 North Vine Street		Glenwood, Iowa 51534

C. Point of Contact (POC) Name for Project	POC Title	POC Agency	POC Email
Wendy Ensly	Secretary		wendy@glenwoodmu.com

POC PO Box and Zip Code	POC Street Address	POC City, State, Zip Code	POC Phone
51534	7 North Vine Street	Glenwood, Iowa 51534	712-527-4868

Alternate POC Name or Authorized Representative	Alt POC Title	Alt POC Agency		Alternate POC Email
Dave Malcom	Utility Sup.	GMU		dave@glenwoodmu.com

Alt POC PO Box and Zip Code	Alt POC Street Address	Alt POC City, State, Zip Code	Alt POC Phone
51534	7 North Vine Street	Glenwood, Iowa 51534	712-527-4868

D. Federal Tax ID # / FEIN	E. County Name	F. US Congressional District(s)	State Legislative Districts Senate House
	Mills		

G. Is the Applicant/Community participating in the National Flood Insurance Program (NFIP)?	Community's CID Number
No	

OLMSTED & PERRY CONSULTING ENGINEERS INC.

10730 PACIFIC STREET SUITE #232 OMAHA, NEBRASKA 68114

2019 FLOOD

FLOOD PROTECTION BERMS & ROADS

GLENWOOD MUNICIPAL UTILITIES

PROJECT NO. 19103

DATE: 11/25/2019

OPINION OF PROBABLE CONSTRUCTION COSTS

CONCEPT

NO.	BID ITEM DESCRIPTION	ESTIMATED QUANTITY	UNIT	UNIT PRICE	TOTAL
1	SITE PREPARATION / MOBILIZATION	1.0	LS	$20,000.00	$20,000.00
2	REMOVE EXG. EMERGENCY FLOOD PROTECTION BERM	2,700.0	LF	$15.00	$40,500.00
3	CONSTRUCT 10' MITIGATION BERM	98,604.0	CY	$8.00	$788,832.00
4	INSTALL CRUSHED ROCK FOR 12' ACCESS ROAD	192.0	TON	$30.00	$5,760.00
5	SURFACE RESTORATION	1.0	LS	$25,000.00	$25,000.00
6	STAKING ALLOWANCE	1.0	ALW	$2,500.00	$2,500.00
7	TESTING ALLOWANCE	1.0	ALW	$5,000.00	$5,000.00

CONSTRUCTION COST	**$887,592.00**
CONTINGENCY @20%	$177,518.40
TOTAL CONSTRUCTION COST	**$1,065,110.40**
SOFT COSTS	$213,000.00
TOTAL PROJECT COST	**$1,278,110.40**

Items not included:

1.
2.
3.
4.
5.

The following opinion of probable project costs has been prepared based on the schematic layouts. The opinion of probable project costs are based on assumptions and no engineering design has been conducted. These are intended to be used as tools for resources and fund allocation by the client. A final opinion of probable project costs will be provided upon completion of engineered construction drawings. The opinion of probable project costs does not reflect unforeseen changes in fuel, oil, pvc, portland cement, steel prices or construction costs.

OLMSTED & PERRY CONSULTING ENGINEERS INC.

10730 PACIFIC STREET SUITE #232 OMAHA, NEBRASKA 68114

2019 FLOOD

GMU WELL RAISING

GLENWOOD MUNICIPAL UTILITIES

PROJECT NO. 19100

DATE: 2/3/2020

OPINION OF PROBABLE CONSTRUCTION COSTS

CONCEPT

NO.	BID ITEM DESCRIPTION	ESTIMATED QUANTITY	UNIT	UNIT PRICE	TOTAL
1	SITE PREPARATION / MOBILIZATION - WELL #1 & WELL #2	1.0	LS	$7,500.00	$7,500.00
2	SITE PREPARATION / MOBILIZATION - WELL #3	1.0	LS	$7,500.00	$7,500.00
3	DEMOLISH EXG. WELL HOUSE, AND REMOVE ALL INTERIOR AND EXTERIOR COMPONENTS	3.0	EA	$7,000.00	$21,000.00
4	PUMP REPAIR ALLOWANCE	3.0	ALW	$20,000.00	$60,000.00
5	SITE GRADING	13,800.0	CY	$8.00	$110,400.00
6	WELL HOUSE FOOTING	156.0	LF	$175.00	$27,300.00
7	EXTEND 18-INCH WELL CASING	31.0	VF	$275.00	$8,525.00
8	PRECAST WELL HOUSE, COMPLETE	3.0	EA	$45,000.00	$135,000.00
9	WELL HOUSE PIPING	3.0	EA	$15,000.00	$45,000.00
10	ELECTRICAL AND CONTROLS	3.0	EA	$15,000.00	$45,000.00
11	CRUSHED ROCK	100.0	TON	$35.00	$3,500.00
12	FABRIC FOR CRUSHED ROCK	280.0	SY	$5.00	$1,400.00
13	SURFACE RESTORATION / SEEDING	1.0	LS	$30,000.00	$30,000.00
14	STAKING ALLOWANCE	1.0	ALW	$2,500.00	$2,500.00
15	TESTING ALLOWANCE	1.0	ALW	$7,500.00	$7,500.00

CONSTRUCTION COST **$512,125.00**

CONTINGENCY @15% $76,818.75

TOTAL CONSTRUCTION COST **$588,943.75**

Items not included:

1.
2.
3.
4.
5.

OLMSTED & PERRY CONSULTING ENGINEERS INC.

10730 PACIFIC STREET SUITE #232 OMAHA, NEBRASKA 68114

2019 FLOOD

GMU WELL RAISING

GLENWOOD MUNICIPAL UTILITIES

PROJECT NO. 19100

DATE: 2/3/2020

OPINION OF PROBABLE CONSTRUCTION COSTS

CONCEPT

NO.	BID ITEM DESCRIPTION	ESTIMATED QUANTITY	UNIT	UNIT PRICE	TOTAL

The following opinion of probable project costs has been prepared based on the schematic layouts. The opinion of probable project costs are based on assumptions and no engineering design has been conducted. These are intended to be used as tools for resources and fund allocation by the client. A final opinion of probable project costs will be provided upon completion of engineered construction drawings. The opinion of probable project costs does not reflect unforeseen changes in fuel, oil, pvc, portland cement, steel prices or construction costs.

OLMSTED & PERRY CONSULTING ENGINEERS INC.

10730 PACIFIC STREET SUITE #232 OMAHA, NEBRASKA 68114

LIFT STATION REPAIRS

PACIFIC JUNCTION LIFT STATION

GLENWOOD MUNICIPAL UTILITIES

PROJECT NO. 19082

DATE: 11/25/2019

OPINION OF PROBABLE CONSTRUCTION COSTS

CONCEPT

NO.	BID ITEM DESCRIPTION	ESTIMATED QUANTITY	UNIT	UNIT PRICE	TOTAL
1	SITE PREPARATION / MOBILIZATION (INCL. TEMPORARY OPERATION AS NECESSARY)	1.0	LS	$15,000.00	$15,000.00
2	DEMOLISH AND REMOVE EXG. GENERATOR AND ELECTRICAL PANELS	1.0	LS	$10,000.00	$10,000.00
3	40 KW DIESEL GENERATOR SYSTEM (CUMMINS 40DSFAB)	1.0	LS	$40,000.00	$40,000.00
4	GENERATOR STRUCTURE	1.0	LS	$50,000.00	$50,000.00
5	NEW 225A AUTOMATIC TRANSFER SWITCH	1.0	LS	$7,500.00	$7,500.00
6	NEW PUMP CONTROL PANEL INCL. VFD'S PUMP CONTROLS, ALAERM DIALER, ETC.	1.0	LS	$60,000.00	$60,000.00
7	ELEVATED CONTROLS STRUCTURE	1.0	LS	$15,000.00	$15,000.00
8	30 HP SUBMERSIBLE PUMP AND MOTOR	1.0	LS	$30,000.00	$30,000.00
9	ON-SITE ELECTRICAL CHANGES	1.0	LS	$5,000.00	$5,000.00
10	SITE FENCING	265.0	LF	$30.00	$7,950.00
11	SURFACE RESTORATION	1.0	LS	$3,500.00	$3,500.00
12	STAKING ALLOWANCE	1.0	ALW	$500.00	$500.00

CONSTRUCTION COST	**$244,450.00**
CONTINGENCY @20%	$48,890.00
TOTAL CONSTRUCTION COST	**$293,340.00**
SOFT COSTS	$58,668.00
TOTAL PROJECT COST	**$352,008.00**

Items not included:

1.
2.
3.
4.
5.

The following opinion of probable project costs has been prepared based on the schematic layouts. The opinion of probable project costs are based on assumptions and no engineering design has been conducted. These are intended to be used as tools for resources and fund allocation by the client. A final opinion of probable project costs will be provided upon completion of engineered construction drawings. The opinion of probable project costs does not reflect unforeseen changes in fuel, oil, pvc, portland cement, steel prices or construction costs.

OLMSTED & PERRY CONSULTING ENGINEERS INC.

10730 PACIFIC STREET SUITE #232 OMAHA, NEBRASKA 68114

LIFT STATION REPAIRS

INGRAHAM LIFT STATION

GLENWOOD MUNICIPAL UTILITIES

PROJECT NO. 19082

DATE: 11/11/2019

OPINION OF PROBABLE CONSTRUCTION COSTS

CONCEPT

NO.	BID ITEM DESCRIPTION	ESTIMATED QUANTITY	UNIT	UNIT PRICE	TOTAL
1	SITE PREPARATION / MOBILIZATION (INCL. TEMPORARY OPERATION AS NECESSARY)	1.0	LS	$15,000.00	$15,000.00
2	DEWATERING	1.0	LS	$50,000.00	$50,000.00
3	REMOVE EXG. PUMPS, MOTORS, CONTROLS, PIPING, AND ABANDON EXG. CANNED LIFT STATION	1.0	LS	$15,000.00	$15,000.00
4	CONSTRUCT WET WELL MANHOLE	1.0	LS	$25,000.00	$25,000.00
5	CONSTRUCT VALVE VAULT MANHOLE	1.0	LS	$10,000.00	$10,000.00
6	CONSTRUCT PRECASE TOP	1.0	LS	$12,500.00	$12,500.00
7	WET WELL PIPING AND FITTINGS	1.0	LS	$10,000.00	$10,000.00
8	VALVE VAULT PIPING, FITTINGS, AND VALVES	1.0	LS	$15,000.00	$15,000.00
9	PUMPS AND MOTORS	2.0	EA	$30,000.00	$60,000.00
10	PUMP CONTROL PANEL, VFDS, COMPLETE	1.0	LS	$40,000.00	$40,000.00
11	ELEVATED ELECTRICAL STRUCTURE	1.0	EA	$15,000.00	$15,000.00
12	ELECTRICAL, COMPLETE	1.0	LS	$20,000.00	$20,000.00
13	SITE PIPING AND CONNECTIONS TO EXG.	1.0	LS	$5,000.00	$5,000.00
14	SITE FENCING	100.0	LF	$30.00	$3,000.00
15	SURFACE RESTORATION	1.0	LS	$5,000.00	$5,000.00
16	STAKING ALLOWANCE	1.0	ALW	$500.00	$500.00

CONSTRUCTION COST	**$301,000.00**
CONTINGENCY @20%	$60,200.00
TOTAL CONSTRUCTION COST	**$361,200.00**
SOFT COSTS @0%	$0.00
TOTAL PROJECT COST	**$361,200.00**

Items not included:

1.
2.
3.
4.

OLMSTED & PERRY CONSULTING ENGINEERS INC.

10730 PACIFIC STREET SUITE #232 OMAHA, NEBRASKA 68114

LIFT STATION REPAIRS

INGRAHAM LIFT STATION

GLENWOOD MUNICIPAL UTILITIES

PROJECT NO. 19082

DATE: 11/11/2019

OPINION OF PROBABLE CONSTRUCTION COSTS

CONCEPT

NO.	BID ITEM DESCRIPTION	ESTIMATED QUANTITY	UNIT	UNIT PRICE	TOTAL

5.

The following opinion of probable project costs has been prepared based on the schematic layouts. The opinion of probable project costs are based on assumptions and no engineering design has been conducted. These are intended to be used as tools for resources and fund allocation by the client. A final opinion of probable project costs will be provided upon completion of engineered construction drawings. The opinion of probable project costs does not reflect unforeseen changes in fuel, oil, pvc, portland cement, steel prices or construction costs.

OLMSTED & PERRY CONSULTING ENGINEERS INC.

10730 PACIFIC STREET SUITE #232 OMAHA, NEBRASKA 68114

LIFT STATION REPAIRS

190TH STREET LIFT STATION

GLENWOOD MUNICIPAL UTILITIES

PROJECT NO. 19082

DATE: 11/11/2019

OPINION OF PROBABLE CONSTRUCTION COSTS

CONCEPT

NO.	BID ITEM DESCRIPTION	ESTIMATED QUANTITY	UNIT	UNIT PRICE	TOTAL
1	SITE PREPARATION / MOBILIZATION (INCL. TEMPORARY OPERATION AS NECESSARY)	1.0	LS	$15,000.00	$15,000.00
2	DEMOLISH AND REMOVE EXG. GENERATOR AND ELECTRICAL PANELS	1.0	LS	$10,000.00	$10,000.00
3	35 KW DIESEL GENERATOR SYSTEM (CUMMINS 40DSFAB)	1.0	LS	$40,000.00	$40,000.00
4	GENERATOR STRUCTURE	1.0	LS	$50,000.00	$50,000.00
5	NEW 225A AUTOMATIC TRANSFER SWITCH	1.0	LS	$7,500.00	$7,500.00
6	NEW PUMP CONTROL PANEL INCL. VFD'S PUMP CONTROLS, ALAERM DIALER, ETC.	1.0	LS	$60,000.00	$60,000.00
7	ELEVATED CONTROLS STRUCTURE	1.0	LS	$15,000.00	$15,000.00
8	ON-SITE ELECTRICAL CHANGES	1.0	LS	$5,000.00	$5,000.00
9	SITE FENCING	500.0	LF	$25.00	$12,500.00
10	SURFACE RESTORATION	1.0	LS	$3,500.00	$3,500.00
11	STAKING ALLOWANCE	1.0	ALW	$500.00	$500.00

CONSTRUCTION COST	**$219,000.00**
CONTINGENCY @20%	$43,800.00
TOTAL CONSTRUCTION COST	**$262,800.00**
SOFT COSTS	$52,560.00
TOTAL PROJECT COST	**$315,360.00**

Items not included:

1.
2.
3.
4.
5.

The following opinion of probable project costs has been prepared based on the schematic layouts. The opinion of probable project costs are based on assumptions and no engineering design has been conducted. These are intended to be used as tools for resources and fund allocation by the client. A final opinion of probable project costs will be provided upon completion of engineered construction drawings. The opinion of probable project costs does not reflect unforeseen changes in fuel, oil, pvc, portland cement, steel prices or construction costs.

Project Plan

Applicant: **Glenwood Municipal Utilities**

Political subdivision shall attach to the Flood Recovery Project Application the project plan.

Project plan shall include:

1. **a. A detailed description of the project Scope of Work.**

   i. How the project supported flood response or will support future flood recovery and flood mitigation activities.

   Multiple projects have been developed to help GMU protect itsefl from future flood. These include the raising of the existing wells, access berms to the raised well sites, elevating controls and electrical on multiple pumping stations, etc.

   ii. Map(s) identifying project area.

   See attached plans showing the properties and locational area.

Project	Current Plan Status
Reconstruct / Floodproof Wells	Completed - Out for Bid, attached
Well Access Berms	In-progress
Emergency Backup Well	In-progress
Water Plant Clearwell and Plant Impr.	In-Progress
190th Street PS	In-Progress
Pacific Junction PS	In-Progress
Ingraham PS	In-Progress
Backup Generator	In-Progress

2. **a. An estimated cost of the project (detailed budget):**

   i. A detailed description of the amount of funds expended to date and the funding source.

   See attached.

3. **a. If available: A copy of the application(s) from other funding sources and subsequent approval letter(s).**

II. Project Cost Information - Glenwood Municipal Utilities

A. Identify the requested funding source: Permanent Work

B. Project Budget Summary

Reconstruct / Floodproof Wells #1, #2, and #3	$ 588,000.00
Well Access Berms	$ 1,065,110.00
Emergency Backup Well	$ 153,400.00
Water Plant Clearwell and Plant Improvements	$ 472,000.00
190th Street Pumping Station	$ 262,800.00
Pacific Junction Pumping Station	$ 293,340.00
Ingraham Pumping Station	$ 361,200.00
Backup Generator	$ 165,200.00
Engineering	$ 628,028.00
Administrative Costs (5%)	$ 199,453.90
Total Project Budget Summary	**$ 4,188,531.90**

C. Project Funding Source

Identify all anticipated funding sources for the project and the amounts.

State that you have applied for and/or received approved federal, state and/or local financial assistance.

Please insert additional rows as needed.

Identify source	Applied/ Received	Federal $	State $	Local $	TOTAL
		$ 441,000.00			$ 441,000.00
			$ 58,800.00		$ 58,800.00
				$ 88,200.00	$ 88,200.00
		$ 798,832.50			$ 798,832.50
			$ 106,511.00		$ 106,511.00
				$ 159,766.50	$ 159,766.50
		$ 153,400.00			$ 153,400.00
			$ -		$ -
				$ -	$ -
		$ 354,000.00			$ 354,000.00
			$ 47,200.00		$ 47,200.00
				$ 70,800.00	$ 70,800.00
		$ 262,800.00			$ 262,800.00
			$ -		$ -
				$ -	$ -
					$ -
					$ -
					$ -
					$ -
					$ -
					$ -
					$ -
					$ -
					$ -
					$ -
					$ -
					$ -
Total Project Funding Source		$ 2,010,032.50	$ 212,511.00	$ 318,766.50	$ 2,541,310.00

2019 FLOOD

RECONSTRUCT / FLOODPROOF WELLS #1, #2, & #3

GLENWOOD MUNICIPAL UTILITIES

OPCE PROJECT NO. 19100
FEMA DAMAGE NO. 290262
FEMA WORK ORDER NO. 42858

DECEMBER 2019

UTILITY BOARD OFFICIALS

CHAIRMAN
DOUG MEGGISON

BOARD MEMBERS
MARCIA CAIN
VONNIE ESTERLING
DICK DAVIS
LONNIE MAYBERRY

SUPERINTENDENT
DAVE MALCOM

SECRETARY
WENDY ENSLEY

ATTORNEY
MATT WOODS

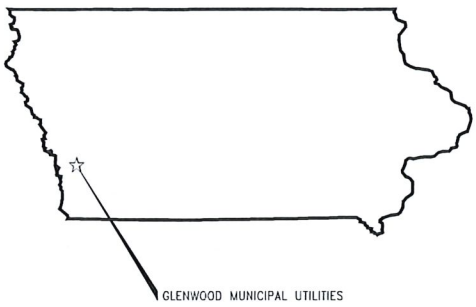

SCHEDULE OF DRAWINGS

1. TITLE SHEET
2. PROJECT LOCATION MAP & GENERAL NOTES
3. EXISTING LAYOUT & TOPOGRAPHY
4. DEMOLITION & REMOVAL PLAN - WELL #1, WELL #2, WELL #3
5. PROPOSED SITE LAYOUT & GRADING PLAN - WELL #1
6. PROPOSED SITE LAYOUT & GRADING PLAN - WELL #2
7. PROPOSED SITE LAYOUT & GRADING PLAN - WELL #3
8. PROPOSED CROSS SECTIONS - WELL #3
9. BORROW SITE LOCATION & DETAILS
10. WELL HOUSE LAYOUT & DETAILS
11. PRECAST BUILDING PANEL ELEVATIONS
12. PRECAST BUILDING FLOOR & ROOF PLANS; DETAILS
13. ELECTRICAL LAYOUT & DETAILS

LICENSED PROFESSIONAL ENGINEER JAMES J. OLMSTED 8642 NEBRASKA

I HEREBY CERTIFY THAT THIS ENGINEERING DOCUMENT WAS PREPARED BY ME OR UNDER MY DIRECT PERSONAL SUPERVISION AND THAT I AM A DULY LICENSED PROFESSIONAL ENGINEER UNDER THE LAWS OF THE STATE OF IOWA.

JAMES J. OLMSTED, P.E. #8642 1-6-2020
DATE

MY LICENSE RENEWAL DATE IS DECEMBER 31, 2021.

SHEETS COVERED BY THIS SEAL: ALL SHEETS

SET NO.

OLMSTED & PERRY CONSULTING ENGINEERS INC.
10730 PACIFIC STREET SUITE 232
OMAHA, NEBRASKA

REVISIONS

2019 FLOOD
RECONSTRUCT / FLOODPROOF WELLS #1, #2, & #3
GLENWOOD MUNICIPAL UTILITIES

DESIGNED BY: JFZ
CHECKED BY: JJO
DRAWN BY: JFZ

TITLE SHEET

PROJECT NO. 19100
DATE DECEMBER 2019

SHEET NO. 1 of 13

GLENWOOD MUNICIPAL UTILITIES

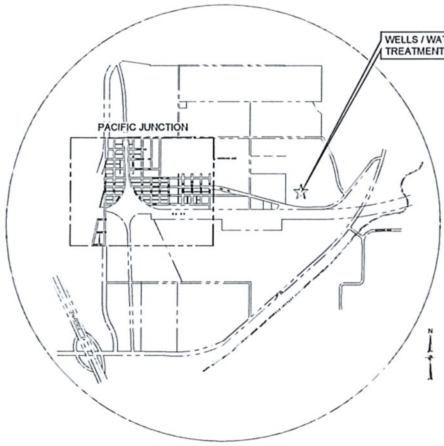

PROJECT LOCATION MAP

1/2 WELL FIELD VICINITY MAP

APPROXIMATE QUANTITIES

ITEM NO.	BID ITEM DESCRIPTION	QUANTITY	UNIT	RECORD QUANTITY
1	SITE PREPARATION / MOBILIZATION - WELL #1	1.0	LS	
2	SITE PREPARATION / MOBILIZATION - WELL #2	1.0	LS	
3	SITE PREPARATION / MOBILIZATION - WELL #3	1.0	LS	
4	DEMOLISH EXG. WELL HOUSE, AND REMOVE ALL INTERIOR AND EXTERIOR COMPONENTS	3.0	EA	
5	PUMP REPAIR ALLOWANCE	3.0	ALW	
6	SITE GRADING	13,800.0	CY	
7	WELL HOUSE FOOTING	156.0	LF	
8	EXTEND 18-INCH WELL CASING	31.0	VF	
9	PRECAST WELL HOUSE, COMPLETE	3.0	EA	
10	WELL HOUSE PIPING	3.0	EA	
11	ELECTRICAL AND CONTROLS	3.0	EA	
12	CRUSHED ROCK	100.0	TON	
13	FABRIC FOR CRUSHED ROCK	280.0	SY	
14	SURFACE RESTORATION / SEEDING	1.0	LS	
15	STAKING ALLOWANCE	1.0	ALW	
16	TESTING ALLOWANCE	1.0	ALW	

STORMWATER POLLUTION PREVENTION NOTES

1. EACH OPERATOR/CONTRACTOR SHALL CONSTRUCT STABILIZED CONSTRUCTION ENTRANCES AS REQUIRED TO LIMIT THE AMOUNT OF SEDIMENT ENTERING PUBLIC ROADWAYS. EACH OPERATOR/CONTRACTOR SHALL MONITOR ALL STABILIZED CONSTRUCTION ENTRANCES WHILE THE ENTRANCES ARE NEEDED AND AS DIRECTED BY THE ENGINEER. OPERATORS/CONTRACTORS SHALL NOT USE ANY OTHER ACCESS TO THE SITE OR ALLOW SUBCONTRACTORS TO USE ALTERNATE ACCESS POINTS.
2. EACH OPERATOR/CONTRACTOR SHALL INSTALL INLET PROTECTION BMP'S AS REQUIRED TO LIMIT THE AMOUNT OF SEDIMENT ENTERING STORM SEWER INLETS.
3. EACH OPERATOR/CONTRACTOR MUST PERFORM PREVENTATIVE MAINTENANCE FOR EACH BEST MANAGEMENT PRACTICE (BMP) TO ENSURE PROPER FUNCTION. THE INSPECTOR MUST ENSURE PREVENTATIVE MAINTENANCE IS BEING PERFORMED.
4. ALL BMP'S MUST BE KEPT IN WORKING ORDER. EACH OPERATOR/CONTRACTOR SHALL REPAIR ALL DAMAGES CAUSED BY POLLUTANT DISCHARGE AND CONSTRUCTION ACTIVITIES AT OR BEFORE THE END OF EACH WORKING DAY AND AS DIRECTED BY THE ENGINEER.
5. THE OWNER, ENGINEER, AND CONTRACTORS/OPERATORS SHALL ADHERE TO ALL GOOD HOUSEKEEPING BMP'S. GOOD HOUSEKEEPING BMP'S FOCUS ON KEEPING THE WORK SITE CLEAN AND ORDERLY WHILE HANDLING MATERIALS AND WASTE IN A MANNER THAT ELIMINATES THE POTENTIAL FOR POLLUTANT RUNOFF.

SEQUENCING PLAN

1. THE CONTRACTOR SHALL COORDINATED ALL CONSTRUCTION WITH GLENWOOD MUNICIPAL UTILITIES STAFF TO ENSURE THAT AN ADEQUATE WATER SUPPLY IS AVAILABLE AT ALL TIMES.
2. THE CONTRACTOR SHALL BEGIN CONSTRUCTION ON WELL #1. THE ENTIRETY OF WELL #1 SHALL BE COMPLETED AND FULLY OPERATIONAL PRIOR TO COMMENCING WORK AT THE OTHER LOCATIONS. ALL TESTING SHALL BE PERFORMED AND VERIFICATION PROVIDED TO THE ENGINEER PRIOR TO PLACING THE WELL BACK INTO SERVICE.
3. CONTRACTOR SHALL ONLY HAVE ONE WELL DOWN AT ANY SINGLE TIME. THE COST OF REMOBILIZING SHALL BE PAID OUT WITH INDIVIDUAL LINE ITEMS (SEE BID FORM).

WELL HOUSE ELEVATIONS

WELL NO.	EXIST. F.F.	2019 MAX. RECORDED FLOOD	NEW F.F.	TOP CASING
1	956.32	965.72	968.00	969.25
2	957.80	965.72	968.00	969.25
3	959.05	965.72	968.00	968.25

GENERAL NOTES

1. THE CONTRACTOR SHALL NOTIFY THE ENGINEER 48 HOURS PRIOR TO THE START OF CONSTRUCTION.
2. THE CONTRACTOR SHALL VERIFY LOCATIONS AND MATERIAL TYPES OF ALL UTILITIES PRIOR TO THE START OF CONSTRUCTION.
3. NO WORK SHALL BE PERFORMED BETWEEN 7 P.M. AND 7 A.M. ON ANY GIVEN DAY OR SUNDAYS OR HOLIDAYS WITHOUT WRITTEN PERMISSION FROM THE ENGINEER.
4. THE APPROXIMATE LOCATIONS OF UTILITY MAINS AND SERVICE LINES (I.E. GAS, CABLE TV, TELEPHONE, POWER, WATER, AND SEWER) HAVE BEEN INDICATED IN PLAN AND PROFILE. HOWEVER, THE EXACT LOCATION MAY VARY FROM THE APPROXIMATE, INDICATED LOCATIONS. THEREFORE, THE CONTRACTOR SHALL VERIFY THE EXACT LOCATIONS AND DEPTHS OF EACH UTILITY WITH THE APPROPRIATE UTILITY COMPANY PRIOR TO TRENCH EXCAVATION.
5. NO BACKFILLING OF PIPE TRENCHES SHALL BE PERFORMED UNTIL THE PIPE AND FITTINGS HAVE BEEN OBSERVED BY THE ENGINEER.
6. REMOVE SURFACING AS REQUIRED FOR CONSTRUCTION AND REPLACE TO ORIGINAL CONDITION. ALL CRUSHED ROCK SURFACES DISTURBED SHALL BE GRADED AND REROCKED.
7. PROVIDE POSITIVE DRAINAGE AT ALL TIMES WITHIN THE CONSTRUCTION AREAS. DO NOT ALLOW WATER TO DRAIN OR TO POND ON PRIVATE PROPERTY.
8. PROTECT ALL BUILDINGS, STRUCTURES, DRIVES, SIDEWALKS, STREETS, POLES, FENCES, BUSHES, TREES, MAILBOXES, SIGNS, UTILITY BOXES, ETC., WHICH ARE NOT DESIGNATED FOR REMOVAL.
9. IF REQUIRED BY CONSTRUCTION OPERATIONS, REMOVE AND REPLACE STRUCTURES, POLES, FENCES, STREET SIGNS, MAILBOXES, DRIVES, AND PAVEMENTS TO THEIR ORIGINAL CONDITION.
10. PROTECT PAVED STREETS AND EXISTING UTILITIES. ANY DAMAGE TO STREETS OR UTILITIES CAUSED BY THE CONTRACTOR'S OPERATIONS SHALL BE REPAIRED AT THE CONTRACTOR'S EXPENSE.
11. ALL CONSTRUCTION ITEMS CALLED OUT ON THE DRAWINGS AND/OR SPECIFICATIONS, WHICH ARE NOT LISTED ON THE APPROXIMATE QUANTITIES OR BID FORM, SHALL BE CONSIDERED INCIDENTAL CONSTRUCTION (NPI).
12. ALL DIMENSIONS AND ELEVATIONS MARKED WITH AN ASTERISK (*) SHALL BE FIELD VERIFIED PRIOR TO CONSTRUCTION.
13. ALL DEBRIS RESULTING FROM CONSTRUCTION OPERATIONS SHALL BE HAULED OFF-SITE AND PROPERLY DISPOSED. ALL CLEARING & GRUBBING REMOVAL SHALL BE DISPOSED AS DIRECTED BY THE ENGINEER & APPROVED BY THE CITY.
14. ABBREVIATIONS USED:

TC	TOP OF CURB	TS	TOP OF SLAB
G	GUTTER ELEVATION	GR	GRADE ELEVATION
HP	HIGH POINT	LP	LOW POINT
CI	CURB INLET	MH	MANHOLE
RIM	RIM ELEVATION	FES	FLARED-END SECTION
FL	FLOWLINE	EL.	ELEVATION
RCP	REINFORCED CONCRETE PIPE	I.E.	INVERT ELEVATION
TP	TOP OF PIPE	HDPE	HIGH DENSITY POLYETHYLENE PIPE
CMP	CORRUGATED METAL PIPE	PVC	POLYVINYL CHLORIDE PIPE
STA.	STATION LOCATION	EXG.	EXISTING
TYP.	TYPICAL	SUB.	SUBSIDIARY
NIC	NOT IN CONTRACT	NPI	NOT PAY ITEM

15. CONTRACTOR SHALL ADJUST TO GRADE ALL WATER AND SANITARY OR STORM SEWER STRUCTURES, INCLUDING MANHOLES, VALVES & JUNCTION BOXES. CONTRACTOR SHALL KEEP ALL SUCH VALVES AND MANHOLES FREE OF DEBRIS AND OPERABLE AT ALL TIMES DURING CONSTRUCTION.
16. DURING CONSTRUCTION CLOSE ENDS OF ALL UTILITY PIPING WITH WATERTIGHT PLUGS AT THE END OF EACH WORKING DAY OR DURING NON-WORKING DAYS.
17. ALL WATER MAIN SHALL HAVE TRACER WIRE ON THE TOP OF THE PIPE AND DAYLIGHT AT LOCATOR BOXES AT APPURTENANCES.
18. THE MINIMUM COVER DEPTH OF ALL WATER MAINS SHALL BE 5 FT. TO THE TOP OF PIPE FROM EXISTING GRADE. THE CONTRACTOR SHALL BE REQUIRED TO VARY THE BURY DEPTH OF THE WATER MAINS WHEN CONFLICTS OCCUR, OR WHEN DIRECTED BY THE ENGINEER.
19. ENCASE ALL WATER MAINS, FITTINGS AND APPURTENANCES IN POLYETHYLENE WRAP IN ACCORDANCE WITH AWWA/ANSI C105/21.05.
20. ALL WATER MAIN FITTINGS SHALL BE MECHANICAL JOINT WITH CONCRETE THRUST BLOCKS UNLESS AS DETAILED ON THE DRAWINGS.
21. CONTOURS SHOWN ARE AT ONE (1) FOOT INTERVALS FOR FINISHED GRADE. ADJUST PAVEMENT OR MATERIAL THICKNESS FOR SUBGRADE ELEVATIONS.
22. ELEVATIONS ARE NAVD 88 DATUM. ADD 1000 TO SPOT ELEVATIONS TO EQUAL SITE DATUM.
23. SITE GRADING SHALL INCLUDE ALL EARTHWORK, INCLUDING EXCAVATION, EMBANKMENT, COMPACTION, CLEARING, STRIPPING, AND TOPSOIL REPLACEMENT.
24. EMBANKMENT AND EXCAVATION AREAS SHALL BE STRIPPED OF ALL VEGETATION AND TOPSOIL TO A MINIMUM DEPTH OF 6 INCHES. TOPSOIL STRIPPINGS SHALL BE REPLACED AT THE COMPLETION OF THE WORK.
25. PROVIDE SMOOTH GRADE TRANSITIONS BETWEEN VARYING SLOPES TO AVOID ABRUPT CHANGES IN GRADE.
26. WATER-REDUCING ADMIXTURE SHALL BE ADDED TO ALL HAND-PLACED AND FINISHED CONCRETE.
27. THE CONTRACTOR SHALL SEED ALL AREAS DISTURBED BY CONSTRUCTION OPERATIONS AS DIRECTED BY THE ENGINEER AND PER THE PROJECT MANUAL.
28. EROSION CONTROL BLANKET SHALL BE NORTH AMERICAN GREEN SC-150 OR EQUAL.
29. GRASS SEED SHALL BE CITY/COUNTY NRD MIXTURE PER THE SPECIFICATION.

Know what's below. Call before you dig.

UTILITY INFORMATION

EXISTING UTILITIES, UNDERGROUND STRUCTURES AND SERVICES WERE LOCATED FROM EXISTING OWNER RECORDS, MAPS AND ONE-CALL DIGGERS HOTLINE PAINT DESIGNATION LINES IN THE FIELD. THE ENGINEER MAKES NO GUARANTEE THAT THE UNDERGROUND UTILITIES SHOWN COMPRISE ALL SUCH UTILITIES IN THE AREA, EITHER IN SERVICE OR ABANDONED. THE ENGINEER FURTHER DOES NOT WARRANT THAT THE UNDERGROUND UTILITIES SHOWN ARE IN THE EXACT LOCATION INDICATED, ALTHOUGH HE DOES CERTIFY THAT THEY ARE LOCATED AS ACCURATELY AS POSSIBLE FROM THE INFORMATION AVAILABLE. VERIFICATION OF ALL UTILITIES AND SERVICES SHOULD BE OBTAINED FROM THE OWNER OF EACH RESPECTIVE UTILITY COMPANY PRIOR TO DESIGN, CONSTRUCTION AND EXCAVATION.

CONSTRUCTION RELATED TELEPHONE NUMBERS

IOWA ONE-CALL UTILITY LOCATES		1-800-292-8989
SECRETARY	WENDY ENSLEY	712-527-4868
WATER AND SEWER	GLENWOOD MUNICIPAL UTILITIES	712-527-4868
CITY STREETS	CITY OF GLENWOOD	712-527-4717
ELECTRIC	MIDAMERICAN ENERGY	712-366-5650
TELEPHONE	CENTURYLINK	800-244-1111
NATURAL GAS	BLACK HILLS ENERGY	800-306-4237
CABLE T.V.	MEDIACOM	800-432-9213
OLMSTED & PERRY CONSULTING ENGINEERS INC.		402-399-8552

OLMSTED & PERRY CONSULTING ENGINEERS INC.
10730 PACIFIC STREET SUITE 232
OMAHA, NEBRASKA

REVISIONS

2019 FLOOD
RECONSTRUCT / FLOODPROOF WELLS
#1, #2, & #3
GLENWOOD MUNICIPAL UTILITIES

DESIGNED BY: JFZ
CHECKED BY: JJO
DRAWN BY: JFZ

PROJECT LOCATION MAP & GENERAL NOTES

PROJECT NO. 19100
DATE DECEMBER 2019

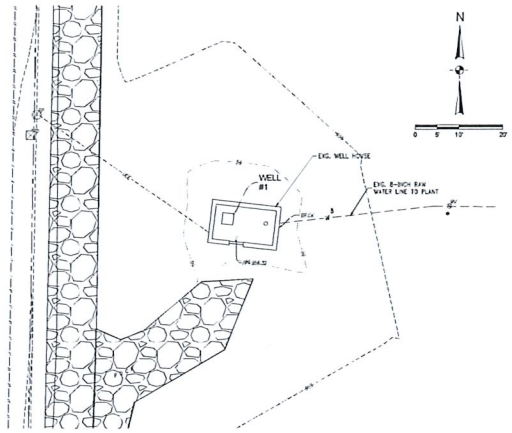

1/3 EXISTING WELL NO. 1 SITE LAYOUT

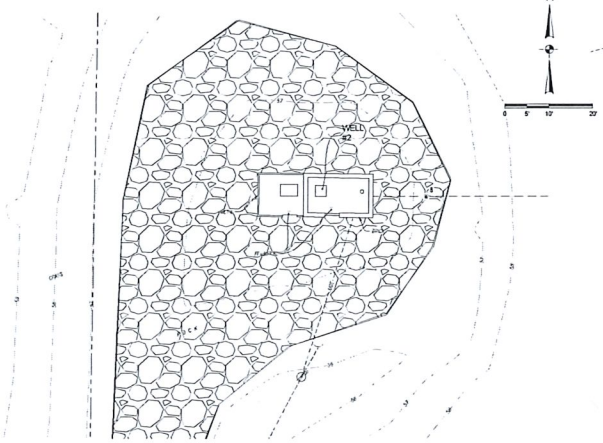

2/3 EXISTING WELL NO. 2 SITE LAYOUT

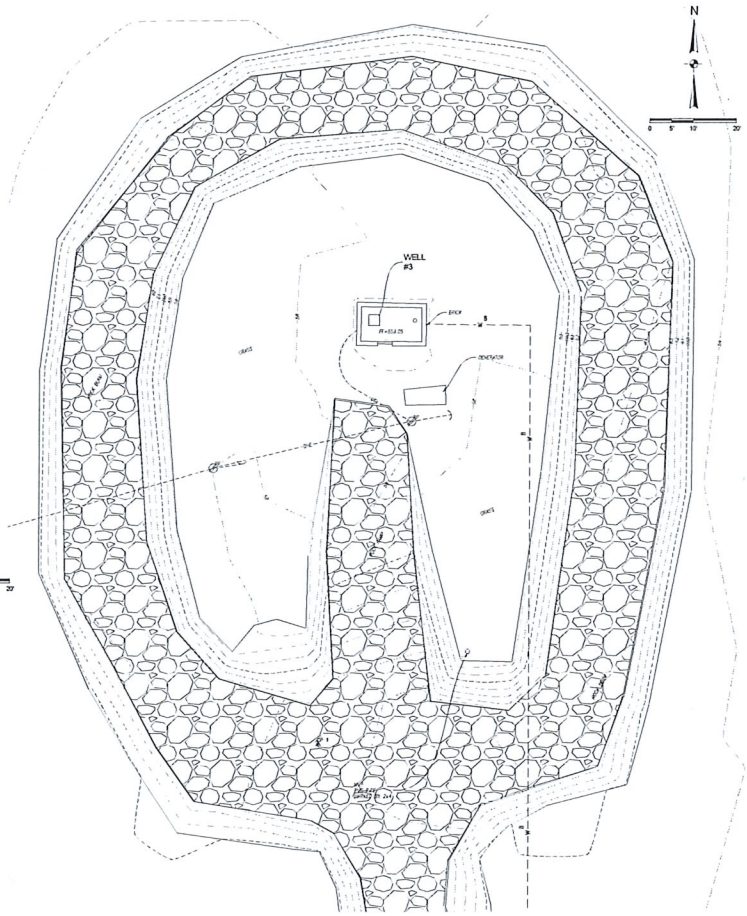

3/3 EXISTING WELL NO. 3 SITE LAYOUT

OLMSTED & PERRY CONSULTING ENGINEERS INC.
10710 PACIFIC STREET SUITE 232
OMAHA, NEBRASKA

REVISIONS

2019 FLOOD
RECONSTRUCT / FLOODPROOF WELLS
#1, #2, & #3
GLENWOOD MUNICIPAL UTILITIES

DESIGNED BY: JFZ
CHECKED BY: JJO
DRAWN BY: JFZ

EXISTING LAYOUT
& TOPOGRAPHY

PROJECT NO. 19100
DATE DECEMBER 2019

SHEET NO. 3 of 13

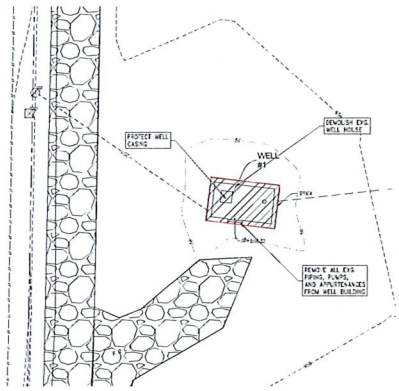

1/4 DEMOLITION & REMOVAL PLAN - WELL #1

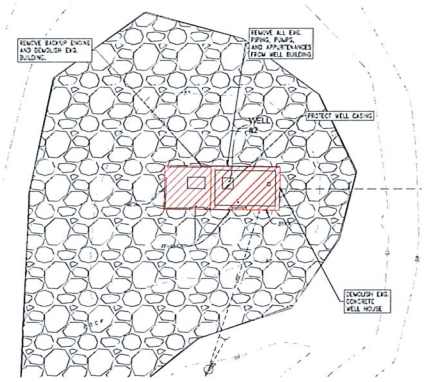

2/4 DEMOLITION & REMOVAL PLAN - WELL #2

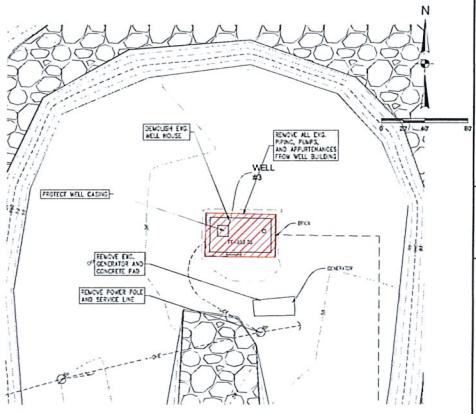

3/4 DEMOLITION & REMOVAL PLAN - WELL #3

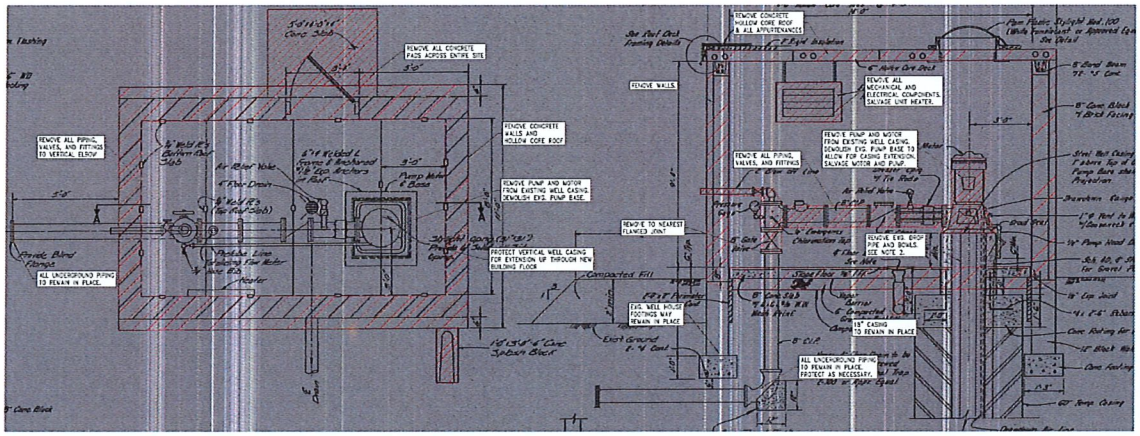

4/4 DEMOLITION & REMOVAL PLAN - TYPICAL LAYOUT

NOTES:

1. THE TYPICAL DEMOLITION AND REMOVAL PLAN DEPICTS THE LAYOUT OF WELLS #1 AND #2. WELL #3 HAS AN ADDITIONAL METAL BUILDING ADDITION THAT CONTAINS A STANDBY POWER ENGINE. THIS METAL ADDITION SHALL ALSO BE DEMOLISHED.
2. CONTRACTOR SHALL CAREFULLY REMOVE EXISTING PUMP, MOTOR, AND ALL SHAFT PIPING INCLUDING BOWLS AND STRAINER. CONTRACTOR SHALL INSPECT ALL PARTS AND REPLACE AS NECESSARY. THE COST OF REPLACEMENT SHALL BE INCLUDED IN THE PUMP REPAIRS ALLOWANCE.
3. THE FOLLOWING ITEMS SHALL BE REMOVED FROM THE EXISTING WELL BUILDINGS WITH THE INTENT TO REINSTALL ONCE NEW WELL BUILDING IS CONSTRUCTED:
   1) 30 HP 480 V MOTOR
   2) UNIT HEATER
   3) EXTERIOR DISCONNECTS
   4) STARTERS
   5) CONTROL PANEL
   6) ANTENNA
4. CONTRACTOR SHALL COORDINATE ALL POWER POLE AND SERVICE LINE REMOVALS WITH MID-AMERICAN ENERGY COMPANY. CONTRACTOR SHALL BE RESPONSIBLE FOR TEMPORARY POWER, AS NEEDED, WHILE ON SITE.

OLMSTED & PERRY CONSULTING ENGINEERS INC.
10730 PACIFIC STREET SUITE 232
OMAHA, NEBRASKA

REVISIONS

2019 FLOOD
RECONSTRUCT / FLOODPROOF WELLS #1, #2, & #3
GLENWOOD MUNICIPAL UTILITIES

DESIGNED BY: JFZ
CHECKED BY: JJD
DRAWN BY: JFZ

DEMOLITION AND REMOVAL PLAN
WELL #1, WELL #2, & #3

PROJECT NO. 19100
DATE DECEMBER 2019

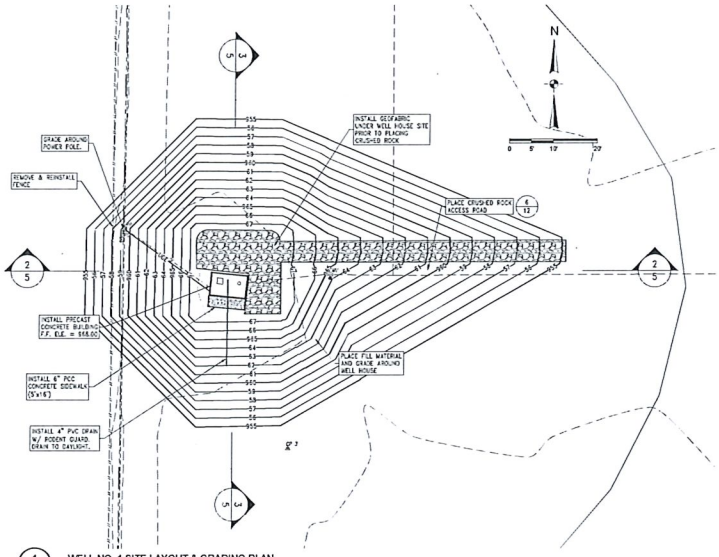

1/5 WELL NO. 1 SITE LAYOUT & GRADING PLAN

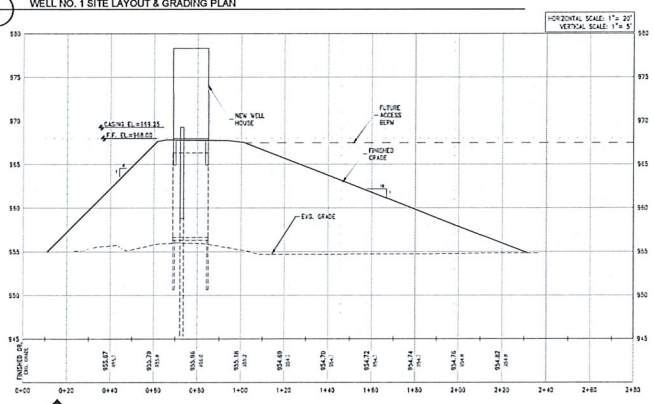

2/5 WELL NO. 1 PROPOSED PROFILE

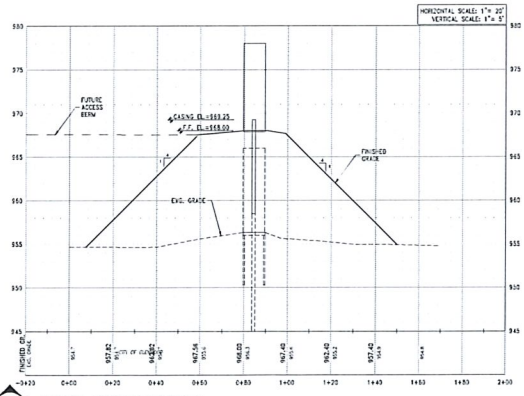

3/5 WELL NO. 2 PROPOSED PROFILE

OLMSTED & PERRY
CONSULTING ENGINEERS INC.
10730 PACIFIC STREET SUITE 232
OMAHA, NEBRASKA

REVISIONS

2019 FLOOD
RECONSTRUCT / FLOODPROOF WELLS
#1, #2, & #3
GLENWOOD MUNICIPAL UTILITIES

DESIGNED BY: JPZ
CHECKED BY: JJD
DRAWN BY: JPZ

PROPOSED SITE LAYOUT & GRADING PLAN
WELL #1

PROJECT NO. 19100
DATE DECEMBER 2019

SHEET NO. 5 of 13

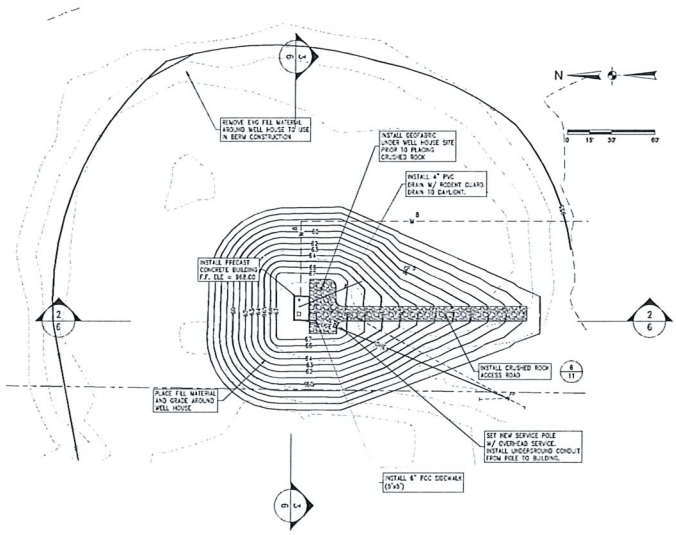

1/6 WELL NO. 2 SITE LAYOUT & GRADING PLAN

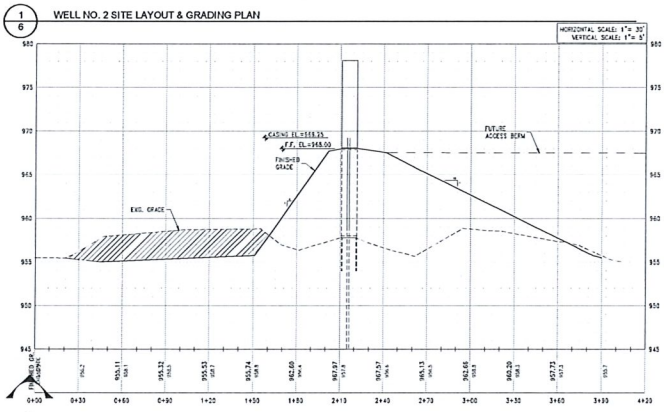

2/6 WELL NO. 2 PROPOSED PROFILE
NORTH AND SOUTH

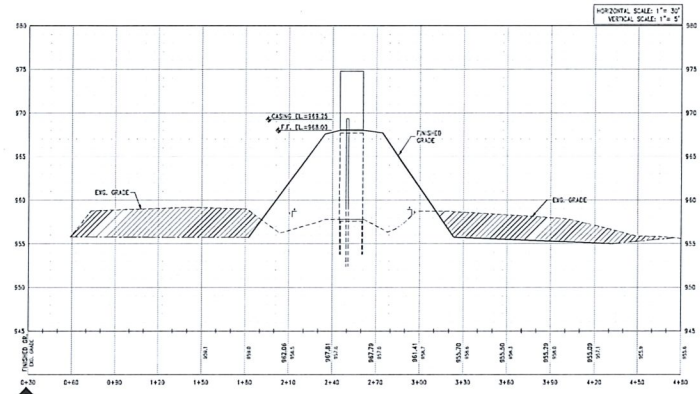

3/6 WELL NO. 2 PROPOSED PROFILE
EAST AND WEST

OLMSTED & PERRY CONSULTING ENGINEERS INC.
10730 PACIFIC STREET SUITE 232
OMAHA, NEBRASKA

REVISIONS

2019 FLOOD
RECONSTRUCT / FLOODPROOF WELLS
#1, #2, & #3
GLENWOOD MUNICIPAL UTILITIES

DESIGNED BY: JZ
CHECKED BY: JJD
DRAWN BY: JZ

PROPOSED SITE LAYOUT & GRADING PLAN
WELL #2

PROJECT NO. 19100
DATE DECEMBER 2019

SHEET NO. 6 of 13

1/7 WELL NO. 3 SITE LAYOUT & GRADING PLAN

OLMSTED & PERRY
CONSULTING ENGINEERS INC.
10730 PACIFIC STREET SUITE 232
OMAHA, NEBRASKA

REVISIONS

2019 FLOOD
RECONSTRUCT / FLOODPROOF WELLS
#1, #2, & #3
GLENWOOD MUNICIPAL UTILITIES

DESIGNED BY: JPZ
CHECKED BY: JJO
DRAWN BY: JPZ

PROPOSED SITE LAYOUT & GRADING PLAN
WELL #3

PROJECT NO. 19100
DATE DECEMBER 2019

SHEET NO. 7 of 13

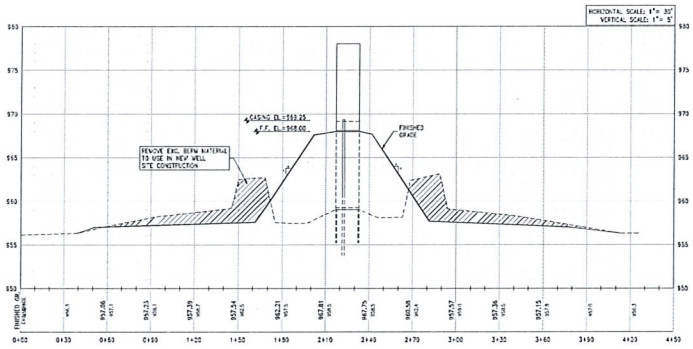

1
8

WELL NO. 3 PROPOSED PROFILE

NORTH AND SOUTH

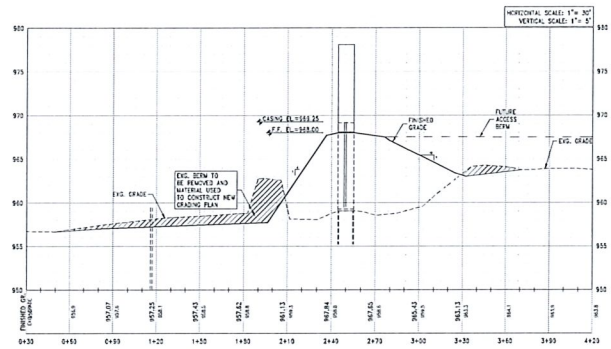

2
8

WELL NO. 3 PROPOSED PROFILE

EAST AND WEST

OLMSTED & PERRY
CONSULTING ENGINEERS INC.
10730 PACIFIC STREET SUITE 232
OMAHA, NEBRASKA

REVISIONS

2019 FLOOD
RECONSTRUCT / FLOODPROOF WELLS
#1, #2, & #3
GLENWOOD MUNICIPAL UTILITIES

DESIGNED BY: JFZ
CHECKED BY: JJD
DRAWN BY: JFZ

PROPOSED CROSS SECTIONS
WELL #3

PROJECT NO. 19100
DATE DECEMBER 2019

SHEET NO. 8 of 13

BORROW SITE NOTES:

1. THE CONTRACTOR SHALL USE FILL AROUND WELLS AND FROM EXISTING BERMS PRIOR TO USING FILL FROM BORROW SITE.
2. CONTRACTOR SHALL BE RESPONSIBLE FOR ALL HAULING, PLACING, AND COMPACTING OF FILL AROUND THE NEW WELL SITES.
3. CONTRACTOR SHALL REMOVE THE TOP 6 INCHES OF TOP SOIL PRIOR TO THE REMOVAL OF FILL MATERIAL. THE TOP SOILS SHALL BE SAVED ON SITE AND REINSTALLED AT THE END OF THE PROJECT.
4. THE CONTRACTOR SHALL SHALL REMOVE APPROXIMATELY THE TOP 2 FEET OF MATERIAL TO USE IN THE GRADING OF THE NEW WELL SITES.
5. CONTRACTOR SHALL PROPERLY STABILIZE, GRADE, AND SEED BORROW SITE ONCE PROJECT IS COMPLETE.
6. THE EXISTING MATERIAL AROUND THE WELL SITES AVAILABLE FOR USE IN CONSTRUCTION OF THE NEW BERMS IS APPROXIMATELY 9,920 CY. THE TOTAL FILL NEEDED TO COMPLETE THE BERM GRADING IS APPROXIMATELY 13,800 CY. THE REMAINING FILL MATERIAL NEEDED SHALL BE REMOVED FROM THE BORROW SITE LOCATIONS.

OLMSTED & PERRY
CONSULTING ENGINEERS INC.
10730 PACIFIC STREET SUITE 232
OMAHA, NEBRASKA

REVISIONS

2019 FLOOD
RECONSTRUCT / FLOODPROOF WELLS
#1, #2, & #3
GLENWOOD MUNICIPAL UTILITIES

DESIGNED BY: JPZ
CHECKED BY: JJO
DRAWN BY: JPZ

BORROW SITE
LOCATION

SHEET NO. 9 of 13
PROJECT NO. 19100
DATE DECEMBER 2019

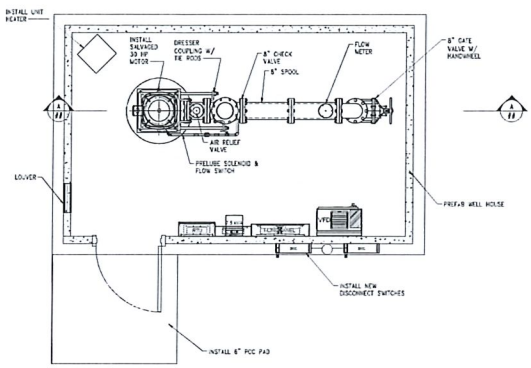

1/10 WELL HOUSE OVERALL PIPING PLAN
SCALE: 1/2"=1'-0"

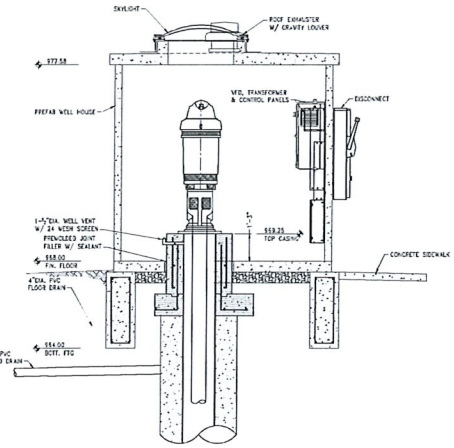

B/10 PIPING - SECTION B-B
SCALE: 1/2"=1'-0"

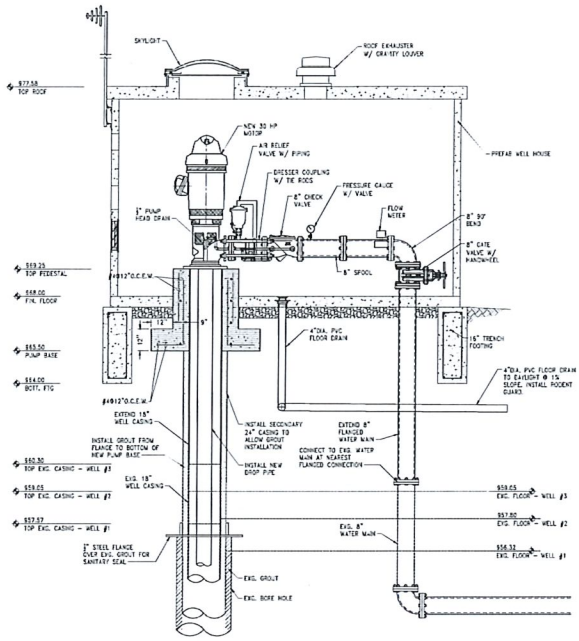

A/10 PIPING - SECTION A-A
SCALE: 1/2"=1'-0"

NOTE:
CONTRACTOR SHALL REMOVE EXISTING PUMP, MOTOR, AND ALL SHAFT PIPING INCLUDING BOWLS AND STRAINER. CONTRACTOR SHALL INSPECT ALL PARTS AND REPLACE AS NECESSARY. THE COST OF REPLACEMENT SHALL BE INCLUDED IN THE PUMP REPAIRS ALLOWANCE. INCLUDED IN THE REPLACEMENT WORK SHALL BE AN EXTENSION OF BOTH THE PUMP COLUMN SHAFT AND DROP PIPE.

N
NOT TO SCALE

OLMSTED & PERRY CONSULTING ENGINEERS INC.
10730 PACIFIC STREET SUITE 232
OMAHA, NEBRASKA

REVISIONS

2019 FLOOD
RECONSTRUCT / FLOODPROOF WELLS #1, #2, & #3
GLENWOOD MUNICIPAL UTILITIES

DESIGNED BY: JFZ
CHECKED BY: JJD
DRAWN BY: JFZ

WELL HOUSE LAYOUT & DETAILS

PROJECT NO. 19100
DATE DECEMBER 2019

SHEET NO. 10 of 13

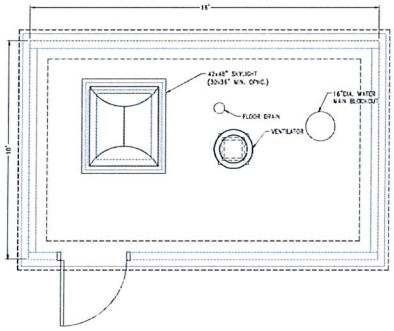

1/11 WELL HOUSE OVERALL PRECAST PANEL PLAN
SCALE: 1/2"=1'-0"

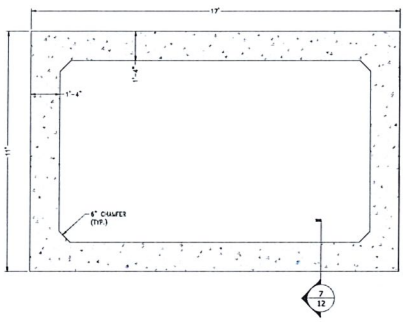

2/11 WELL HOUSE FOUNDATION PLAN
SCALE: 1/2"=1'-0"

6/11 ROOF HATCH RAISED CURB SECTION
SCALE: 1/2"=1'-0"

NOTES

1. EXTERIOR WALL DIMENSIONS ARE 10 FEET BY 18 FEET. FLOOR PANEL AND ROOF PANEL OVERHANG MAY BE ADJUSTED BY PRECAST MANUFACTURER FOR ASSEMBLY REQUIREMENTS.
2. PRECAST MANUFACTURER SHALL VERIFY ALL PANEL DIMENSIONS SHOWN FOR FABRICATION AND STRUCTURE ASSEMBLY.
3. PRECAST MANUFACTURER SHALL VERIFY ALL BLOCKOUT DIMENSIONS FOR DOORS, VENTS, OPENINGS, SKYLIGHT, ETC. WITH THE CONTRACTOR OR SUPPLIER PRIOR SUBMITTING SHOP DRAWINGS FOR REVIEW.
4. BUILDING EXTERIOR SHALL BE SPLIT FACE BLOCK TEXTURE FINISH WITH COLOR PIGMENT (238 BUTTERCUP).

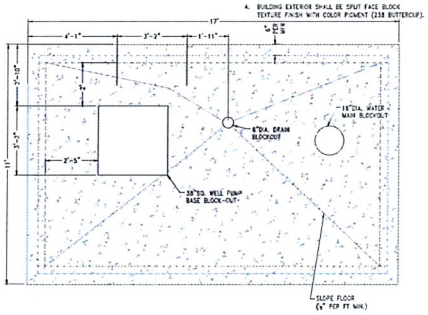

3/11 WELL HOUSE FLOOR PLAN - FLOOR PANEL
SCALE: 1/2"=1'-0"

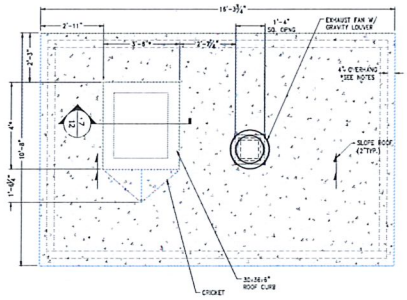

4/11 WELL HOUSE ROOF PLAN - ROOF PANEL
SCALE: 1/2"=1'-0"

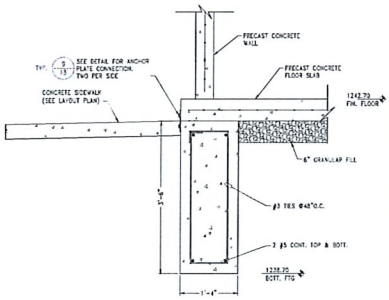

7/11 TRENCH FOOTING
SCALE: 1/2"=1'-0"

OLMSTED & PERRY
CONSULTING ENGINEERS INC.
10730 PACIFIC STREET SUITE 232
OMAHA, NEBRASKA

REVISIONS

2019 FLOOD
RECONSTRUCT / FLOODPROOF WELLS
#1, #2, & #3
GLENWOOD MUNICIPAL UTILITIES

DESIGNED BY: JFZ
CHECKED BY: JJD
DRAWN BY: JFZ

PRECAST BUILDING
PANEL ELEVATIONS

PROJECT NO. 19100
DATE DECEMBER 2019

SHEET NO. 11 of 13

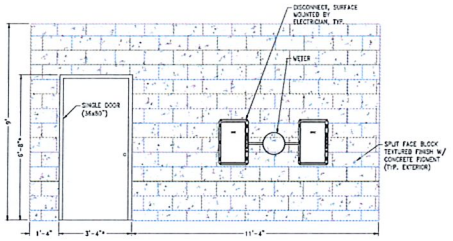

1/12 WELL HOUSE FRONT EXTERIOR
SCALE: 1/2"=1'-0"

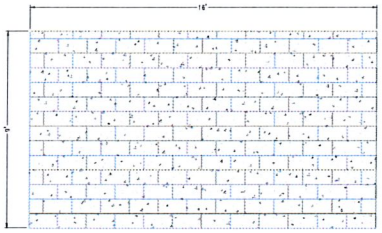

2/12 WELL HOUSE BACK EXTERIOR
SCALE: 1/2"=1'-0"

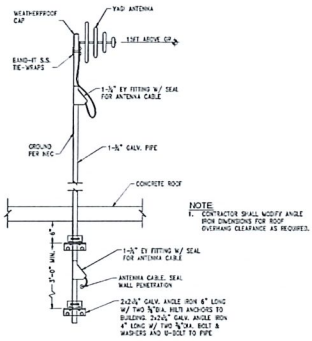

NOTE
1. CONTRACTOR SHALL MODIFY ANGLE IRON DIMENSIONS FOR ROOF OVERHANG CLEARANCE AS REQUIRED.

5/12 RTU ANTENNA MOUNTING
NO SCALE

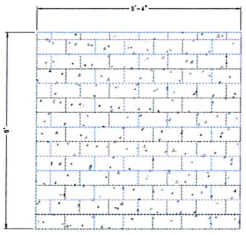

3/12 WELL HOUSE SIDE 1 EXTERIOR
SCALE: 1/2"=1'-0"

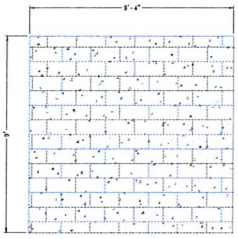

4/12 WELL HOUSE SIDE 2 EXTERIOR
SCALE: 1/2"=1'-0"

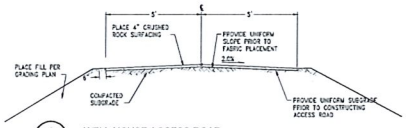

6/12 WELL HOUSE ACCESS ROAD
NO SCALE

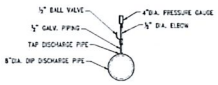

NOTE
1. PRESSURE GAUGE SHALL BE LIQUID FILLED STAINLESS STEEL WITH 4" FACE WITH A RANGE OF 0-150 PSI.

7/12 PRESSURE GAUGE
NO SCALE

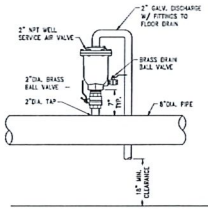

8/12 WELL SERVICE AIR VALVE
NO SCALE

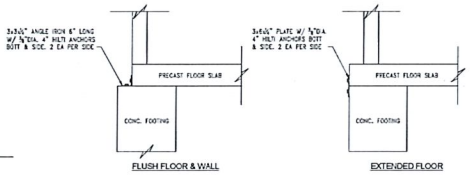

9/12 BUILDING / FOOTING CONNECTION
NO SCALE

OLMSTED & PERRY CONSULTING ENGINEERS INC.
10730 PACIFIC STREET, SUITE 232
OMAHA, NEBRASKA

REVISIONS

2019 FLOOD
RECONSTRUCT / FLOODPROOF WELLS
#1, #2, & #3
GLENWOOD MUNICIPAL UTILITIES

DESIGNED BY: JJD
CHECKED BY: JJD
DRAWN BY: JFE

PRECAST BUILDING
FLOOR & ROOF PLANS

PROJECT NO. 191100
DATE DECEMBER 2019

SHEET NO. 12 of 13

NOTES

1. CONTRACTOR SHALL SCHEDULE THEIR WORK W/ MIDAMERICAN ENERGY COMPANY (MEC).
2. CONTRACTOR SHALL COMPLY WITH MEC ELECTRICAL SERVICE REQUIREMENTS MANUAL.
3. CONTRACTOR SHALL COORDINATE & OBTAIN ALL ELECTRICAL INSPECTION REVIEWS, APPROVALS, & PERMITS.
4. THE CONTRACTOR SHALL PROVIDE CONDUIT, C.T. CABINET AND ALL OTHER PANELS, CONDUIT, CONDUCTORS AND EQUIPMENT.
5. MEC SHALL PROVIDE THE SERVICE, METER AND SERVICE CONDUCTORS BETWEEN THE SERVICE LINE AND METER.
6. ALL ELECTRICAL CONDUCTORS SHALL BE BURIED UNDERGROUND (36") IN CONDUIT.
7. HORIZONTAL CONDUIT PRIOR TO THE TRANSFORMER SHALL BE SCH. 40 PVC UNDERGROUND. VERTICAL CONDUIT INTO THE TRANSFORMER SHALL BE SCH. 80 PVC FROM THE METER TO THE DISCONNECT.
8. ALL PUMP ROOM INTERIOR CONDUIT SHALL BE RIGID GALV. AND ALL INTERIOR CHEM FEED ROOM SHALL BE SCH. 40 PVC.
9. ALL CONDUIT IS NOT SHOWN. ELECTRICAL CONTRACTOR SHALL DETERMINE THE BEST ROUTING PATH AND CIRCUIT COMBINATIONS BASED ON FIELD CONDITIONS AND APPLICABLE ELECTRICAL CODES.
10. EQUIPMENT LOCATIONS AND ARRANGEMENT ARE SCHEMATIC. COORDINATE ALL CONTROL AND INSTRUMENTATION REQUIREMENTS WITH CONTROLS INTEGRATOR FOR DETAILED CONNECTION REQUIREMENTS AND PROVIDE MATERIALS AND INSTALLATION FOR A COMPLETE AND OPERATIONAL SYSTEM.
11. SEAL ALL WALL PENETRATIONS FOR ALL CIRCUITS.
12. GROUND AND BOND NEW SERVICE AND ASSOCIATED EQUIPMENT IN ACCORDANCE WITH NEC.

ELECTRICAL NOTES

1. EXHAUST FAN. INTERLOCK WITH MOTORIZED AIR INTAKE LOUVER
2. THERMOSTAT
3. UNIT HEATER (SALVAGED FROM EXS. WELL HOUSE)
4. MOTOR (30 HP)

LIGHTING FIXTURE SCHEDULE (PER BUILDING)

ID	TYPE	LAMP SIZE	MOUNTING	QUANTITY
L-1	LITHONIA 1x4' SURFACE MOUNT LED TLL4 33L 8W WWG	1'x4'	INT. CEILING	1
L-2	LITHONIA LED WALL PACK CUBE TWB1 LED F3 40K MVOLT FE DDBTXD		EXT. WALL MOUNT 20FT OLR	4

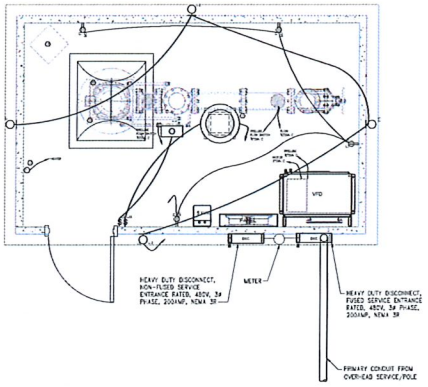

1/13 WELL HOUSE WIRING DIAGRAM

SCALE: 1/2"=1'-0"

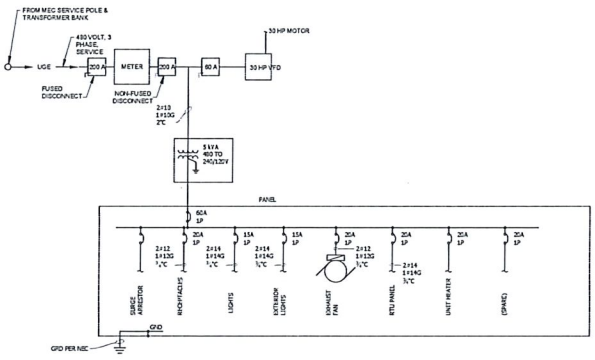

2/13 ELECTRICAL ONE-LINE DIAGRAM

NO SCALE

OLMSTED & PERRY CONSULTING ENGINEERS INC.
10730 PACIFIC STREET SUITE 232
OMAHA, NEBRASKA

REVISIONS

2019 FLOOD
RECONSTRUCT / FLOODPROOF WELLS
#1, #2, & #3
GLENWOOD MUNICIPAL UTILITIES

DESIGNED BY: JPZ
CHECKED BY: JJD
DRAWN BY: JPZ

ELECTRICAL SITE LAYOUT & DETAILS

PROJECT NO. 19100
DATE DECEMBER 2019

SHEET NO. 13 of 13

III. Project Plan Summary

A. Provide a brief description of the project and how the project supported flood response or will support future flood recovery and flood mitigation activities. This is a summary of Tab B - Project Plan.
Removal of debris from within the District, removal of silt from existing ditches, replacement of missing embankment

B. Provide a brief description of the financial assistance need through the Flood Recovery Fund.
Due to the amounts of debris, silt, and damaged infrastructure throughout the District, we are requesting funds to help with the improvements.

C. Explain how financial assistance through the Flood Recovery Fund is essential to meet the necessary expenses or serious needs of the applicant related to flood response, flood recovery, and flood mitigation.
At this time, the District has not assessed for anything more than a typical years' operation and maintenance costs. The cost of the flood damages greatly outweighs the typical assessment value.

D. Provide details of any additional funds that can be applied to the project.

E . Description of Project Location (i.e. Latitude and Longitude (minimum 6 digits after the decimal), Neighborhood, Subdivision, Geographic Boundaries, Driving Directions, etc.)
A copy of the plans for the debris/silt removal has been attached showing locations of the improvements

IV. Work Schedule

A. List the major milestones for this project.

Task	Months/Years from Award			Responsible Party
	Start	Complete		
Reconstruct / Floodproof Wells #1, #2, and #3	3/15/2020	9/1/2020		Contractor; will be bid
Well Access Berms	4/1/2020	9/1/2020		Contractor; will be bid
Emergency Backup Well	5/1/2020	10/1/2020		Contractor; will be bid
Water Plant Clearwell and Plant Improvements	5/1/2020	10/1/2020		Contractor; will be bid
190th Street Pumping Station	4/1/2020	7/1/2020		Contractor; will be bid
Pacific Junction Pumping Station	4/1/2020	7/1/2020		Contractor; will be bid
Ingraham Pumping Station	4/1/2020	7/1/2020		Contractor; will be bid
Backup Generator	5/1/2020	8/1/2020		Contractor; will be bid
Total Project Duration:				

V. Certifications

To the best of my knowledge and belief, I certify that all data in this application packet is complete, true and correct. The governing body of the applicant has duly authorized this document and hereby applies for assistance as documented in this application. The applicant understands that the project shall not proceed until Flood Mitigation Board approval is granted.

Signature of the Chief Executive Officer

Name of the Chief Executive Officer

Title

Organization

Date

Phone Number

Signature of the Authorized Representative

Name of Authorized Representative

Title

Organization

Date

PO Box / Street Address

City, State and Zip Code

Phone Number

Email Address